Sequence Cartridge Valves

	Cartridge Type	*Page*
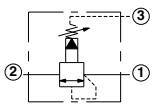	Pilot Operated, Balanced Piston	22
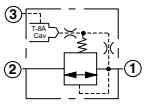	Externally Drained, Balanced Piston, Modulating Element	23
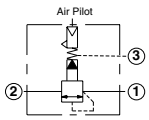	Air Controlled, Pilot Operated, Balanced Piston	24
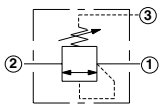	Direct Acting without Reverse Flow Check	25
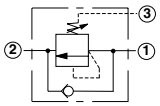	Direct Acting with Reverse Flow Check	26
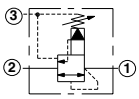	Pilot Operated, Kick-down	27

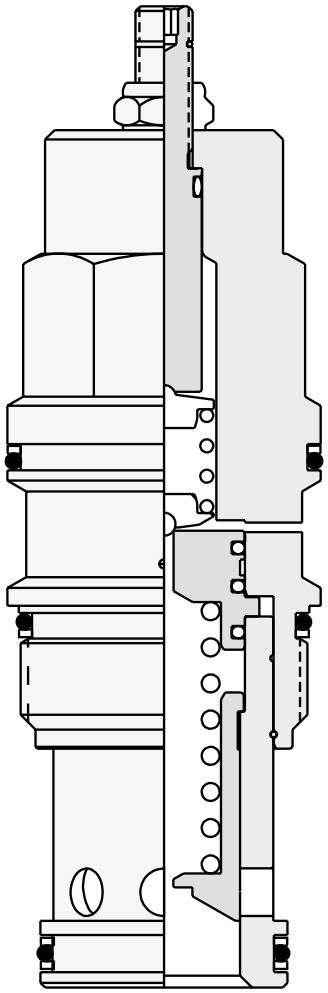

PILOT OPERATED, BALANCED PISTON

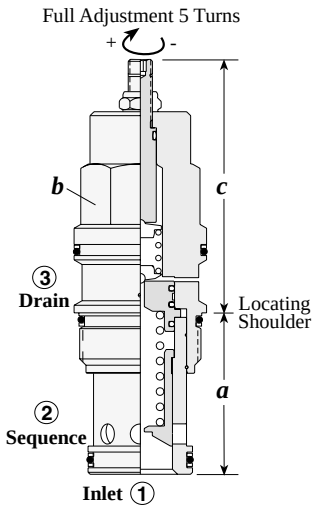

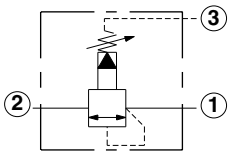

Capacity	Typical Cartridge Model Code	Cavity	Cartridge Dimensions a	b	c L	c C	c K	Installation Torque (Nm)
30 L/min.	**RSBC – LAN**	T - 163A	31	19,1	65	67	71	35/40
60 L/min.	**RSDC – LAN**	T - 11A	34,9	22,2	64	66	70	40/50
120 L/min.	**RSFC – LAN**	T - 2A	34,9	28,6	72	74	78	60/70
240 L/min.	**RSHC – LAN**	T - 17A	46	31,8	84	86	90	200/215
480 L/min.	**RSJC – LAN**	T - 19A	63,5	41,3	100	104	107	465/500

Performance Curves

RSBC **RSDC** **RSFC** **RSHC** **RSJC**

Pressure Drop Sequenced Open

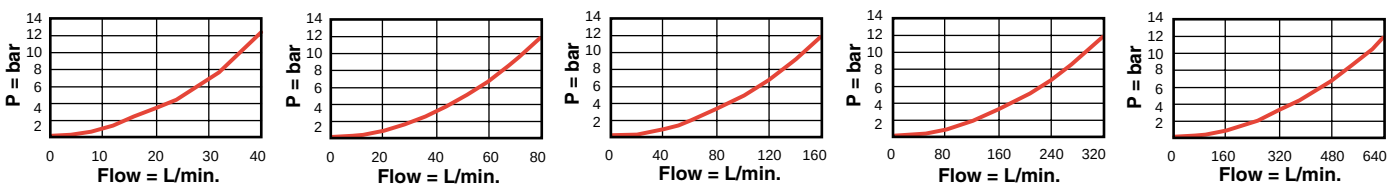

- Maximum operating pressure = 350 bar
- Maximum leakage = RSDC: 32,8 cc/min./70 bar, RSFC: 49,2 cc/min./70 bar, RSHC: 65,5 cc/min./70 bar , RSJC: 81,9 cc/min./70 bar.
- Typical response time 10 ms
- Pressure at port 3 is directly additive to the valve setting at a 1:1 ratio and should not exceed 350 bar.
- Pilot flow continues to increase as the pressure at port 1 (inlet), relative to the pressure at port 3 (drain), rises above the valve setting.
- RSBC minimum setting is 5 bar for all spring ranges.

OPTION ORDERING INFORMATION

Model Codes printed in Red are Preferred Versions and most readily available

RS ★ C – ★ ★ ★

Nominal Capacity	*Control***	*Adjustment Range*	*Seal*
B 30 L/min.*	**L** Standard Screw	**A** 7 - 210 bar	**N** Buna-N
D 60 L/min.	**C** Tamper Resistant	**B** 3,5 - 105 bar	**V** Viton
F 120 L/min.	**K** Handknob	**C** 10 - 420 bar	
H 240 L/min.		**N** 4 - 55 bar	
J 480 L/min.		**Q** 4 - 25 bar	
		W 10 - 315 bar	

*** See page 162 for information on Control Options*

Adjustment Range Options:
A, B, C, and W are standard set at 70 bar.
N Option is standard set at 25 bar.
Q Option is standard set at 14 bar.
** Minimum setting 5 bar on all ranges.*
Customer may specify pressure setting.

Visit www.sunhydraulics.com for detailed and complete technical information on our full line of products.

EXTERNALLY DRAINED, BALANCED PISTON, MODULATING ELEMENT

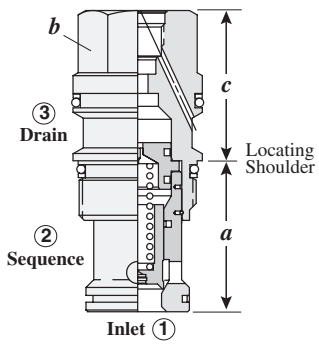

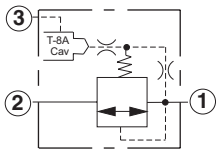

The -8 control option allows a pilot control valve to be incorporated directly into the end of the modulating element via the T-8A cavity. These pilot control cartridges are sold separately and include electro-proportional, solenoid, air pilot, and hydraulic pilot operation. See Pilot Control Cartridges on page 121.

Capacity	*Typical Cartridge Model Code*	*Cavity*	*Cartridge Dimensions*			*Installation Torque (Nm)*
			a	*b*	*c*	
60 L/min.	**RSDC – 8WN**	T - 11A	34,9	22,2	30,2	40/50
120 L/min.	**RSFC – 8WN**	T - 2A	34,9	28,6	35,1	60/70
240 L/min.	**RSHC – 8WN**	T - 17A	46,0	31,8	46,0	200/215
480 L/min.	**RSJC – 8WN**	T - 19A	63,5	41,3	58,7	465/500

Performance Curves

RSDC-8 **RSFC-8** **RSHC-8** **RSJC-8**

Typical Pressure Rise

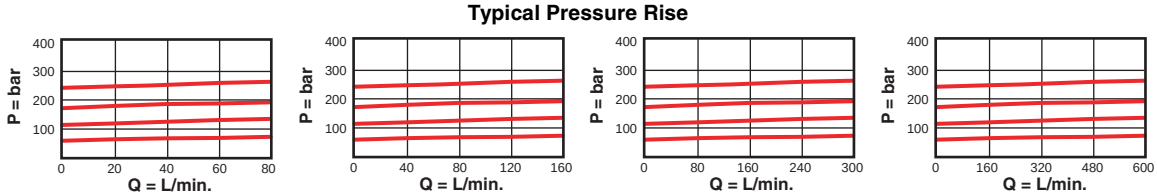

- Maximum operating pressure = 350 bar
- Will accept maximum pressure at Port 2.
- Pressure at port 3 is directly additive at a 1:1 ratio to the valve setting and should not exceed 350 bar
- Control pilot flow = RSDC-8: 0,11 to 0,16 L/min., RSFC-8: 0,16 to 0,25 L/min., RSHC-8, RSJC-8: 0,25 to 0,33 L/min.
- Maximum leakage = RSDC-8: 32,8 cc/min/ 70 bar: RSFC-8: 49,2 cc/min./70, RSHC-8: 65,5 cc/min./70 bar, RSJC-8: 81,9 cc/min./70 bar.
- With the -8 control option, the main stage valve should first be installed to the correct torque value. The T-8A pilot control valve should then be installed into the main stage valve to its required torque value.

OPTION ORDERING INFORMATION

Model Codes printed in Red are Preferred Versions and most readily available

RS ★ C – 8 ★ ★

Nominal Capacity

- **D** 60 L/min.
- **F** 120 L/min.
- **H** 240 L/min.
- **J** 480 L/min.

Control

- **8** T-8A Cavity in hex body for pilot operation (Pilot valve to be ordered separately)

MinimumControl Pressure

- **D** 1,7 bar
- **W** 7 bar

Seal

- **N** Buna-N
- **V** Viton

Visit www.sunhydraulics.com for detailed and complete technical information on our full line of products.

AIR CONTROLLED, PILOT OPERATED, BALANCED PISTON

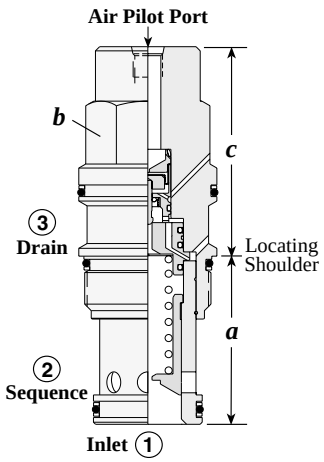

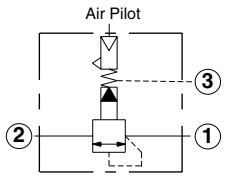

Capacity	Typical Cartridge Model Code	Cavity	Cartridge Dimensions a	b	c A	c B	Installation Torque (Nm)
120 L/min.	**RSFE – ABN**	T - 2A	34,9	28,6	51	-	60/70
240 L/min.	**RSHE – BBN**	T - 17A	46	31,8	-	63	200/215
480 L/min.	**RSJE – BBN**	T - 19A	63,5	41,3	-	80	465/500

Performance Curves

RSFE **RSHE** **RSJE**

Pressure Drop Sequenced Open

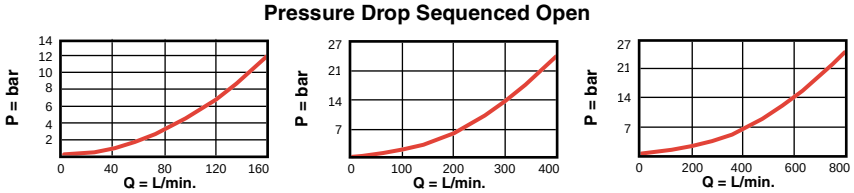

- Pilot ratio, air to hydraulic 1:20
- Maximum operating pressure = 140 bar
- Maximum air pressure should not exceed 10 bar.
- Typical response time 10 ms.
- Maximum leakage = RSFE: 49,2 cc/min./70 bar, RSHE: 65,5 cc/min./70 bar, RSJE: 81,9 cc/min./70 bar.

OPTION ORDERING INFORMATION

Model Codes printed in Red are Preferred Versions and most readily available

RS ★ E – ★ B ★

Nominal Capacity

F 120 L/min.

H 240 L/min.

J 480 L/min.

Control

Available for RSFE only

A 1/4" NPTF Pilot Port at end of Cartridge*

Available for RSHE, RSJE only

B SAE-4 Pilot Port at end of Cartridge*

Adjustment Range

B 3,5 - 105 bar

Seal

N Buna-N

V Viton

Visit www.sunhydraulics.com for detailed and complete technical information on our full line of products.

DIRECT ACTING WITHOUT REVERSE FLOW CHECK

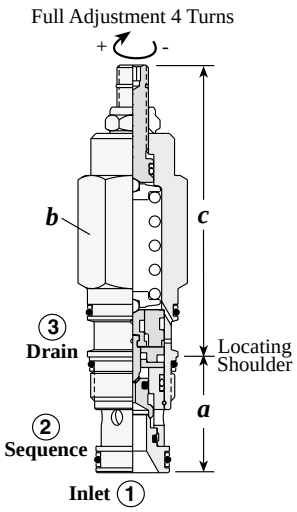

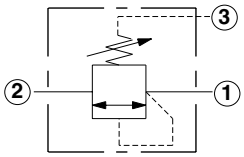

Capacity	Typical Cartridge Model Code	Cavity	Cartridge Dimensions a	b	c L	c C	Installation Torque (Nm)
60 L/min.	**SXCA – LAN**	T - 11A	34,9	22,2	79	81	40/50
120 L/min.	**SXEA – LAN**	T - 2A	34,9	28,6	89	91	60/70

Performance Curves

SXCA **SXEA**

Pressure Drop Sequenced Open

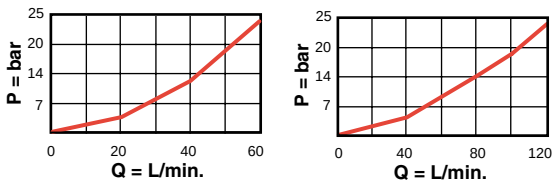

- Maximum operating pressure = 350 bar
- Maximum valve leakage at reseat = 0,7 cc/min
- Typical response time 2 ms
- Pressure at port 3 is directly additive to the valve setting at a 1:1 ratio and should not exceed 350 bar.
- Reseat exceeds 85% of cracking pressure.

OPTION ORDERING INFORMATION

Model Codes printed in Red are Preferred Versions and most readily available

SX ★ A – ★ ★ ★

Nominal Capacity	*Control***	*Adjustment Range*	*Seal*
C 60 L/min.	**L** Standard Screw	**A** 35 - 210 bar	**N** Buna-N
E 120 L/min.	**C** Tamper Resistant	**B** 20 - 105 bar	**V** Viton
		C 140 - 420 bar	
		D 14 - 55 bar	
		W 55 - 315 bar	

** *See page 162 for information on Control Options*

Adjustment Range Options:
A, B, and W are standard set at 70 bar.
C Option is standard set at 140 bar.
D Option is standard set at 25 bar.
Customer may specify pressure setting.

Visit www.sunhydraulics.com for detailed and complete technical information on our full line of products.

DIRECT ACTING WITH REVERSE FLOW CHECK

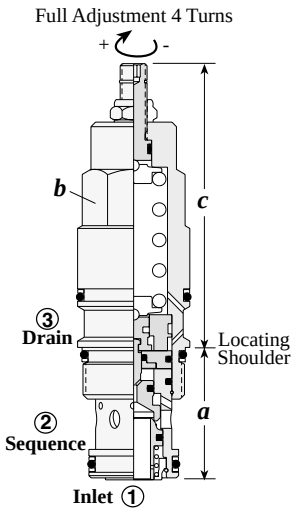

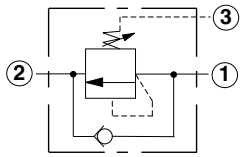

Capacity	*Typical Cartridge Model Code*	*Cavity*	*Cartridge Dimensions* *a*	*b*	*c* L	*c* C	*Installation Torque (Nm)*
60 L/min.	**SCCA – LAN**	T - 11A	34,9	22,2	79	81	40/50
120 L/min.	**SCEA – LAN**	T - 2A	34,9	28,6	89	91	60/70
240 L/min.	**SCGA – LAN**	T - 17A	46	31,8	100	102	200/215
480 L/min.	**SCIA – LAN**	T - 19A	63,5	41,3	122,9	128,5	465/500

Performance Curves

SCCA **SCEA** **SCGA** **SCIA**

Free Flow to Pressure Drop Sequenced Open

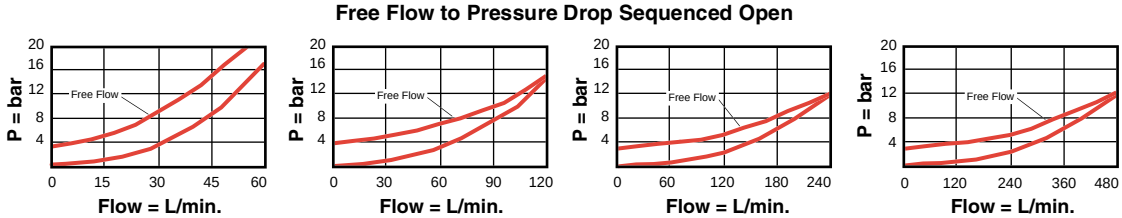

- Maximum operating pressure = 350 bar
- Maximum valve leakage at reseat = 0,7 cc/min
- Free flow check cracking pressure = 2,8 bar
- Typical response time 2 ms
- Pressure at port 3 is directly additive to the valve setting at a 1:1 ratio and should not exceed 350 bar.
- Reseat exceeds 85% of cracking pressure.

OPTION ORDERING INFORMATION

Model Codes printed in Red are Preferred Versions and most readily available

SC ★ A – ★ ★ ★

Nominal Capacity	*Control***	*Adjustment Range*	*Seal*
C 60 L/min.	**L** Standard Screw	**A** 35 - 210 bar	**N** Buna-N
E 120 L/min.	**C** Tamper Resistant	**B** 20 - 105 bar	**V** Viton
G 240 L/min.		**C** 140 - 420 bar	
I 480 L/min.		**D** 14 - 55 bar	
		W 55 - 315 bar	

*** See page 162 for information on Control Options*

Adjustment Range Options:
A, B, and W are standard set at 70 bar.
C Option is standard set at 140 bar.
D Option is standard set at 25 bar.
Customer may specify pressure setting.

Visit www.sunhydraulics.com for detailed and complete technical information on our full line of products.

PILOT OPERATED, KICK-DOWN

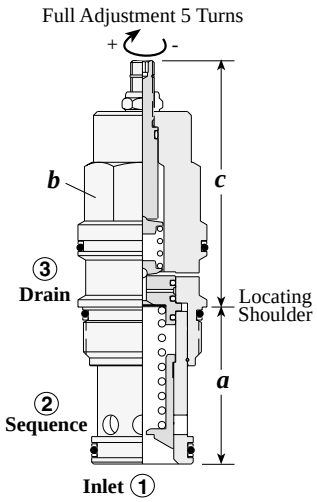

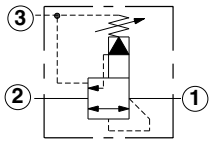

Capacity	Typical Cartridge Model Code	Cavity	Cartridge Dimensions a	b	c L	c C	c K	Installation Torque (Nm)
60 L/min.	**SQDB – LAN**	T - 11A	34,9	22,2	64	66	70	40/50
120 L/min.	**SQFB – LAN**	T - 2A	34,9	28,6	72	74	78	60/70
240 L/min.	**SQHB – LAN**	T - 17A	46	31,8	84	86	90	200/215
480 L/min.	**SQJB – LAN**	T - 19A	63,5	41,3	100	104	107	465/500

Performance Curves

SQDB **SQFB** **SQHB** **SQJB**

Pressure Drop Sequenced Open

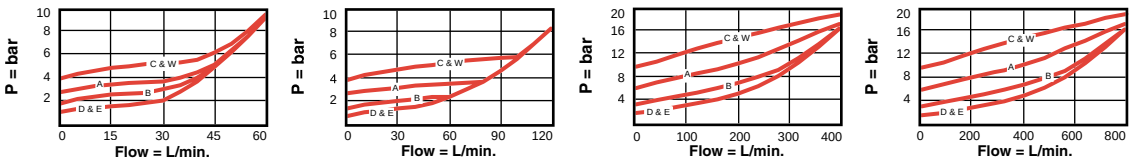

- Maximum operating pressure = 350 bar
- Maximum leakage = SQDB: 32,8 cc/min./70 bar, SQFB: 49,2 cc/min./70 bar , SQHB: 65,5 cc/min./70 bar, SQJB: 81,9 cc/min./70 bar
- Typical response time 25 ms
- Pressure at port 3 is directly additive to the valve setting at a 1:1 ratio and should not exceed 350 bar.
- To reset valve, flow through the cartridge must cease.

OPTION ORDERING INFORMATION

Model Codes printed in Red are Preferred Versions and most readily available

SQ ★ B – ★ ★ ★

Nominal Capacity		*Control***		*Adjustment Range*		*Seal*	
D	60 L/min.	**L**	Standard Screw	**A**	7 - 210 bar	**N**	Buna-N
F	120 L/min.	**C**	Tamper Resistant	**B**	3,5 - 105 bar	**V**	Viton
H	240 L/min.	**K**	Handknob	**C**	10 - 420 bar		
J	480 L/min.			**D**	2 - 55 bar		
				E	2 - 25 bar		
				W	10 - 315 bar		

*** See page 162 for information on Control Options*

Adjustment Range Options:
A, B, C, and W are standard set at 70 bar.
D Option is standard set at 25 bar.
E Option is standard set at 14 bar.
Customer may specify pressure setting.

Visit www.sunhydraulics.com for detailed and complete technical information on our full line of products.

NOTES